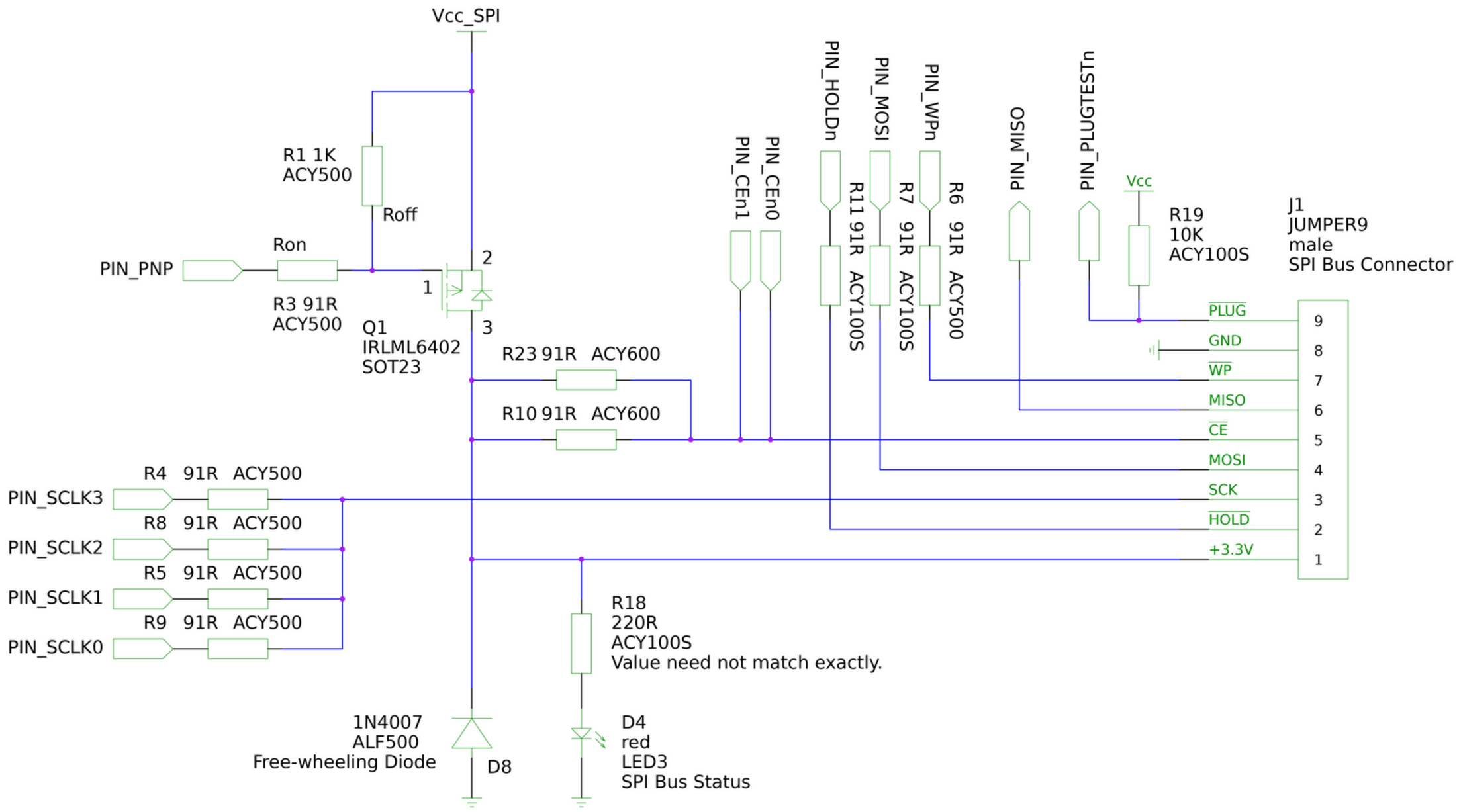

SPI Bus		Zerocat Chipflasher Flash free firmware, kick the Management Engine. git://zerocat.org/zerocat/projects/chipflasher	
TITLE			
FILE:	chipflasher-page04.sch	REVISION:	v2.0.2-0-4270742b1 (flashrom-interface)
PAGE	OF	DRAWN BY:	kmx