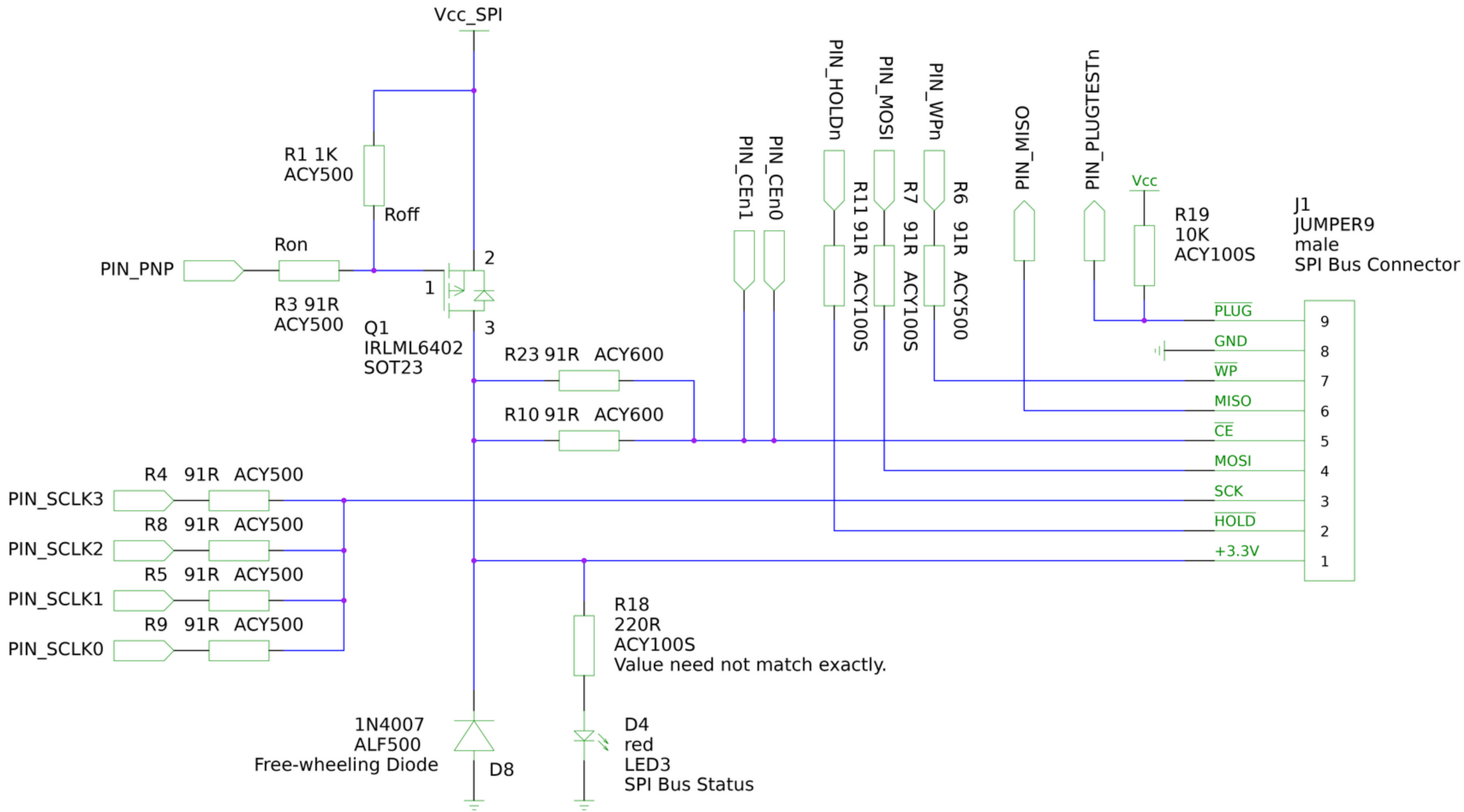

SPI Bus		Zerocat Chipflasher Flash free firmware, kick the Management Engine. git://zerocat.org/zerocat/projects/chipflasher	
TITLE			
FILE:	chipflasher-page04.sch	REVISION:	v0.7.0-318-fa7ba6995
PAGE	OF	DRAWN BY:	kmx