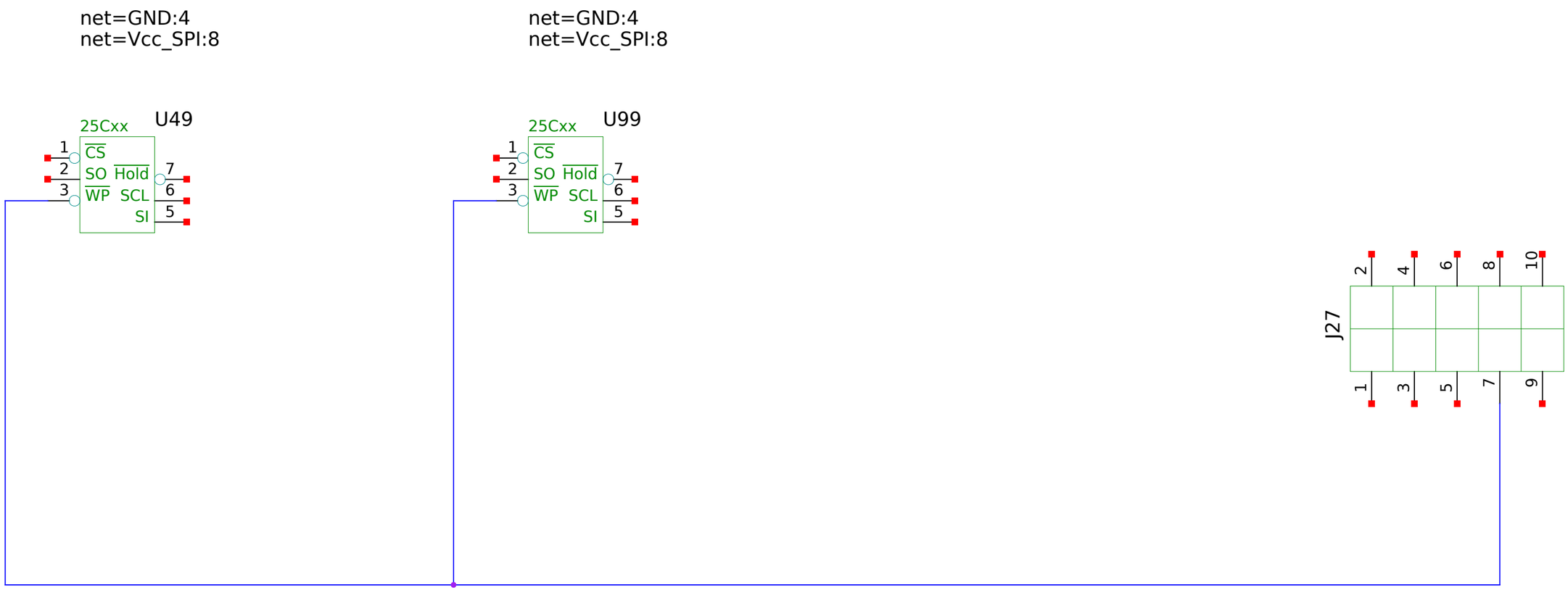


# Zerocat Flash Access

Interfacing BIOS Chips in Hardware Protection Mode

git://zerocat.org/zerocat/projects/zerocat-flash-access

| | | | |
|---|---|---|---|
| TITLE | | | |
| FILE: | t430-spi-flash-connector-page04.sch | REVISION: | v0.4.3-0-3c0d96e (master) |
| PAGE | OF | DRAWN BY: | kmx |